CROSALTER

Radiateur design & inox

www.radiateur-design.com

info@radiateur-design.com

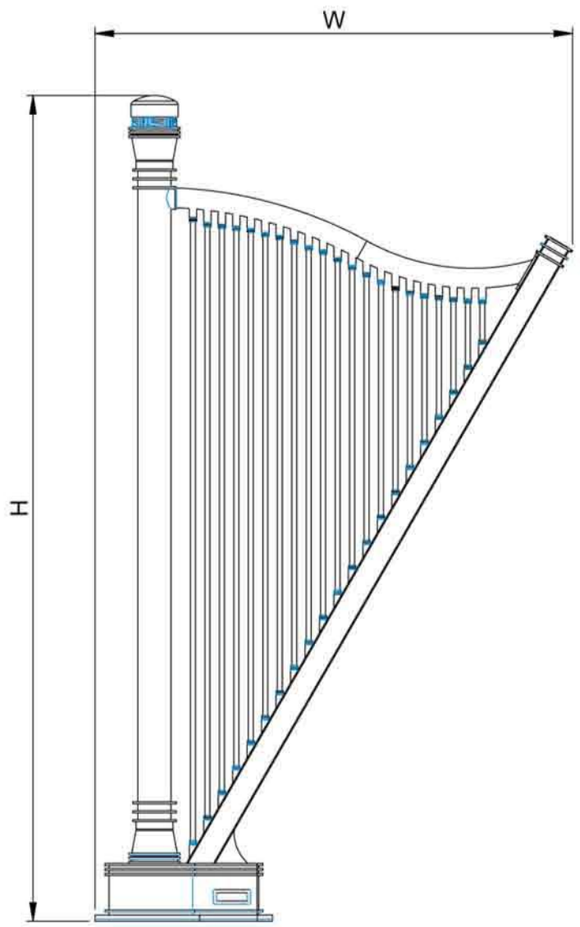

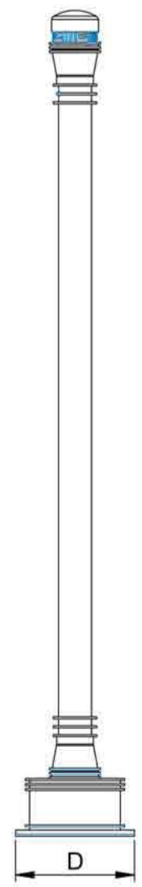

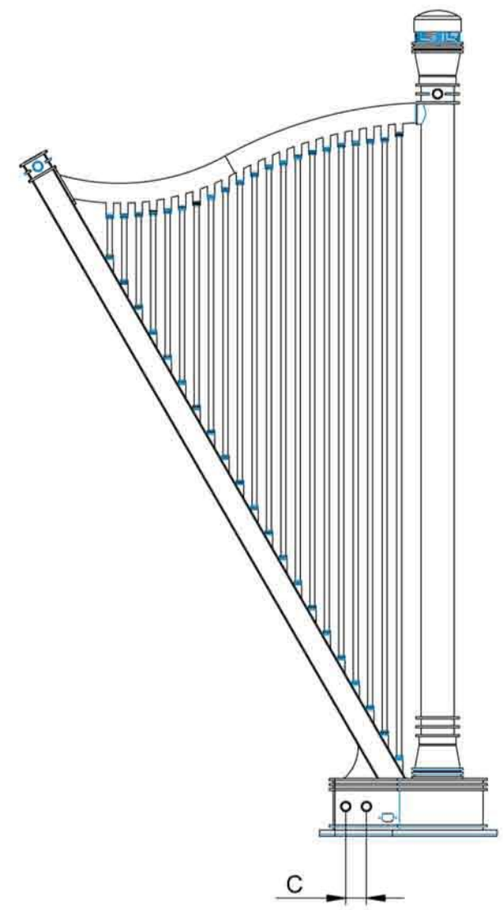

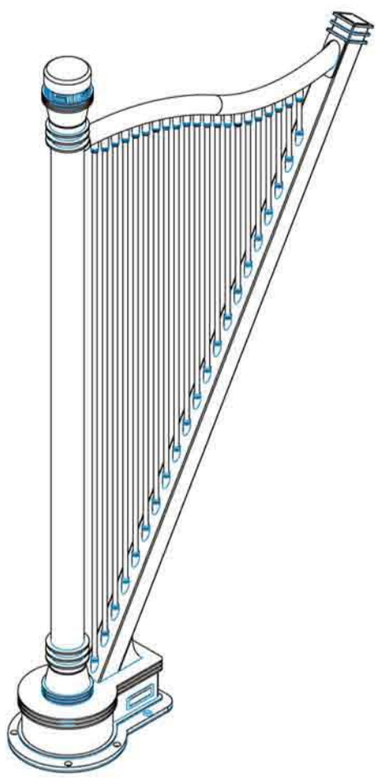

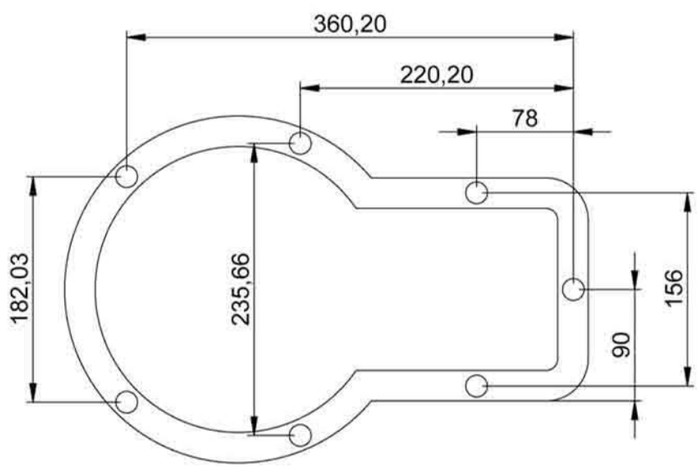

Hole Template

Product Code	Width	Height	Depth	Connection Centers	Tube Quantity	Assembly Axis		Weight	Water Capacity
	W	H	D	C		S	L	kg.	lt.
	1150	2000	280	50	21	-	-	44,0	15,2