www.radiateur-design.com
info@radiateur-design.com

CROSALTER

Radiateur design & inox

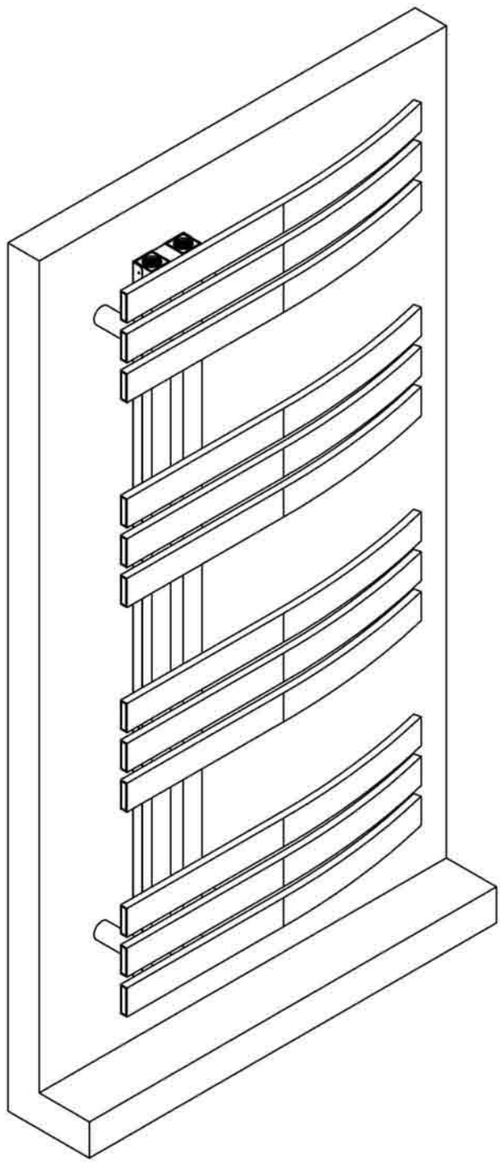

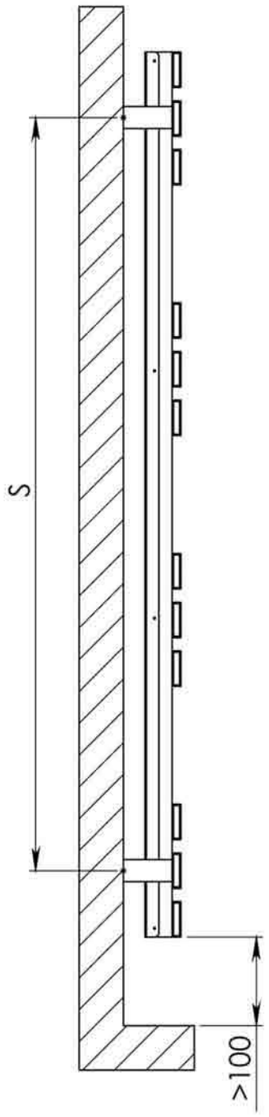

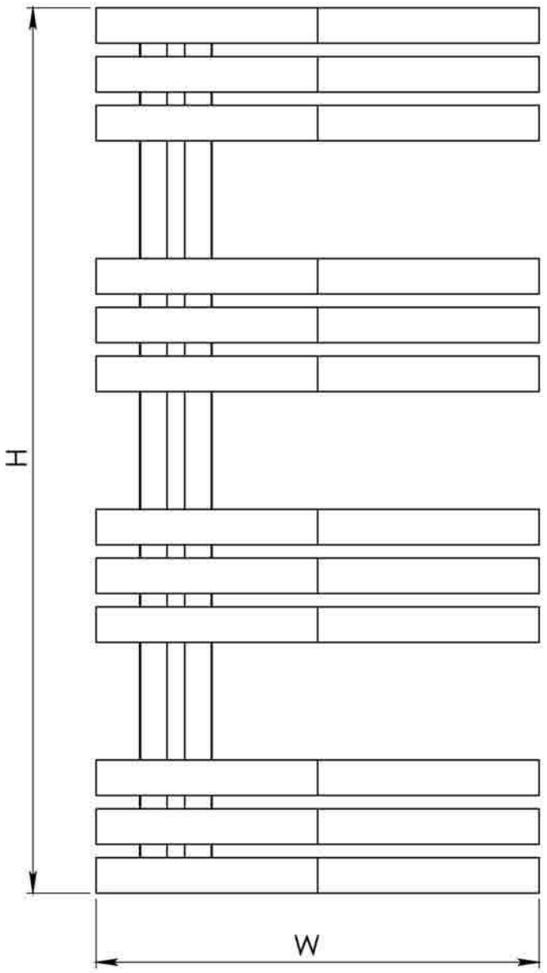

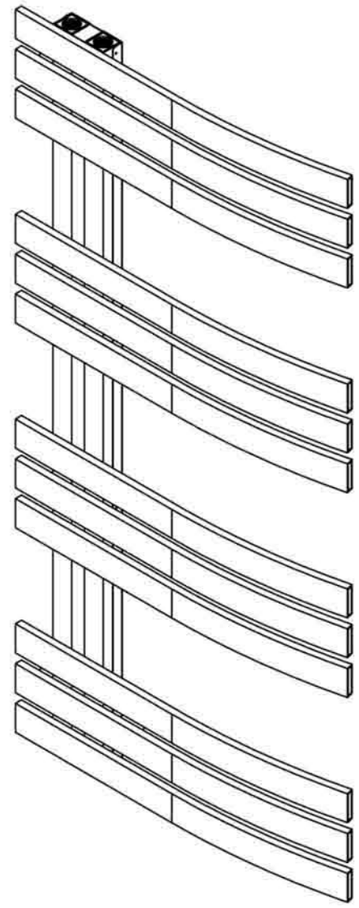

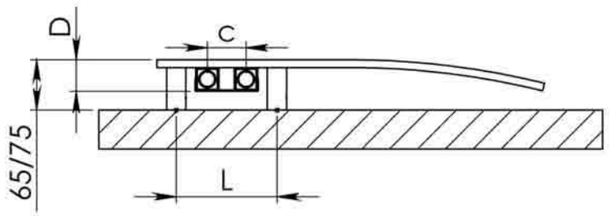

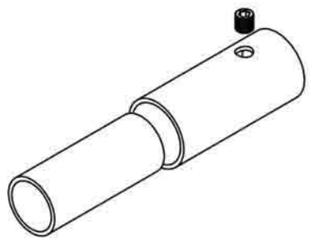

Product Code	Width	Height	Depth	Connection Centers	Tube Quantity	Assembly Axis		Weight	Water Capacity
	W	H	D	C		S	L	kg.	lt.
	500	1000	40	50	12	850	130	11,8	3,1
	500	1565	40	50	18	1415	130	17,8	4,6